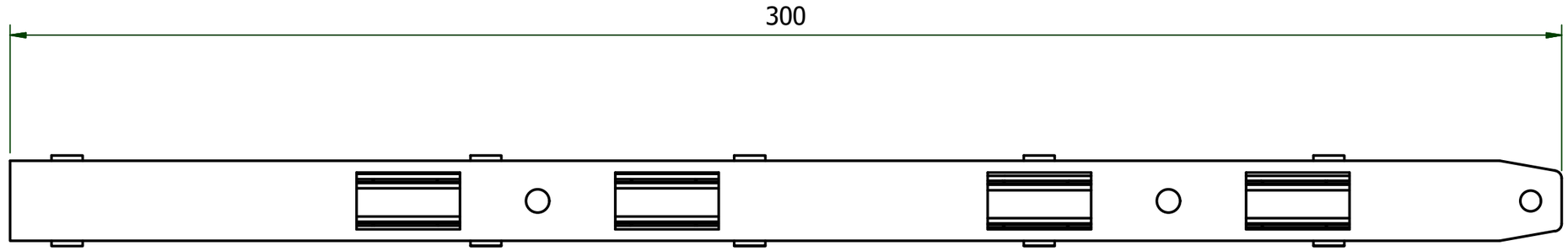

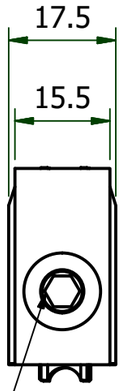

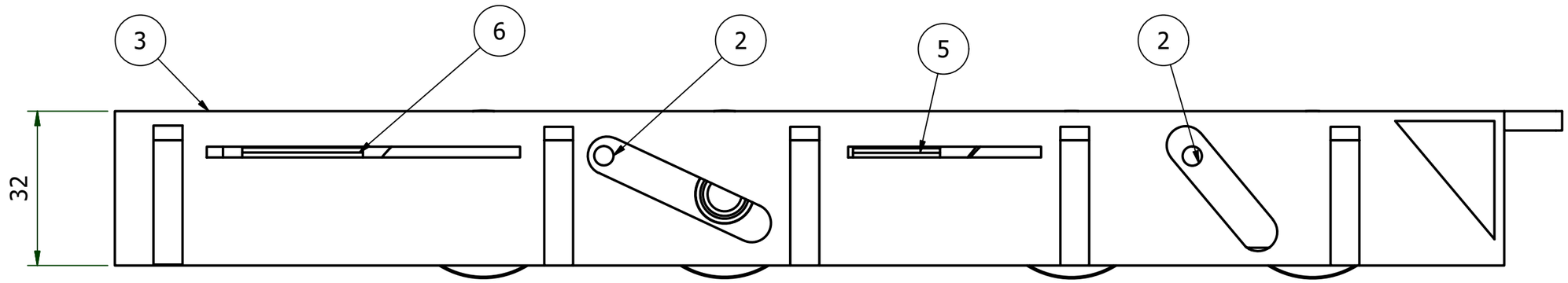

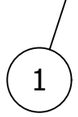

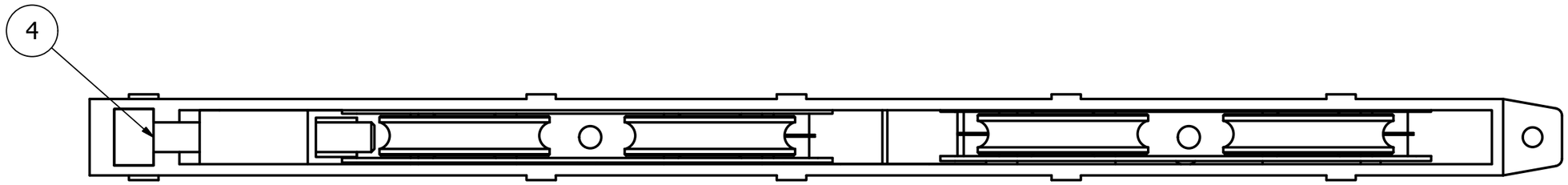

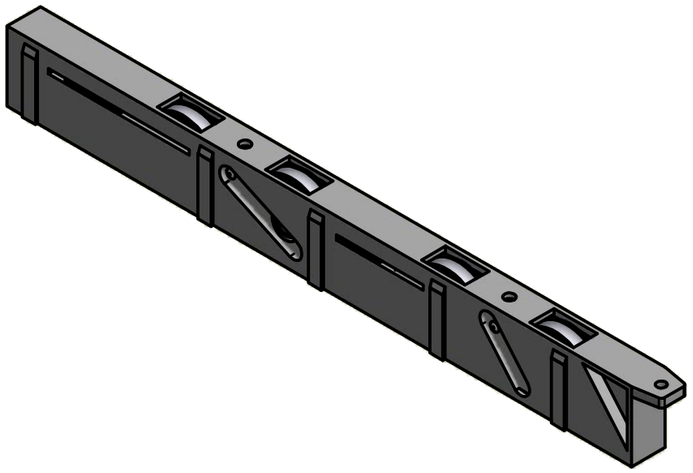

PARTS LIST			
ITEM	QTY	DESCRIPTION	MATERIAL
1	1	Broached Socket Head Cap Screw	Stainless Steel
2	2	Inner Carriage Assembly	Stainless Steel Inner Carriage with Plastic Tryed Bearings
3	1	Outer Carriage	Glass Reinforced Nylon
4	1	Screw Insert	Stainless Steel
5	1	Middle Adjusting Wege	Glass Reinforced Nylon
6	1	Adjusting Block	Plastic Adjusting Block with Stainless Steel Nut

DESIGNED BY	CHECKED BY	MATERIAL	DATE	PART NO.	WEIGHT
callum			17/08/2016	**45-7401-SNG**	N/A

MAMMOTH special bearings

TITLE

45-7401-SNG

ALL DIMENTIONS ARE IN MILLIMETERS (UNLESS OTHERWISE STATED)

GENERAL TOLERANCE: ±0.20 (UNLESS OTHERWISE STATED)

THIS DRAWING AND THE INFORMATION CONTAINED ARE THE PROPERTY OF MAMMOTH INDUSTRIES PTY LTD. THEY MAY NOT BE REPRODUCED OR USED IN WHOLE OR PART WITHOUT THE PRIOR WRITTEN PERMISSION OF MAMMOTH INDUSTRIES PTY LTD.

File Ref: 45-7400.iam

REVISION

SIZE A3